The pump 10A(C)...X179 is a second section of multiple pump Gr.21.

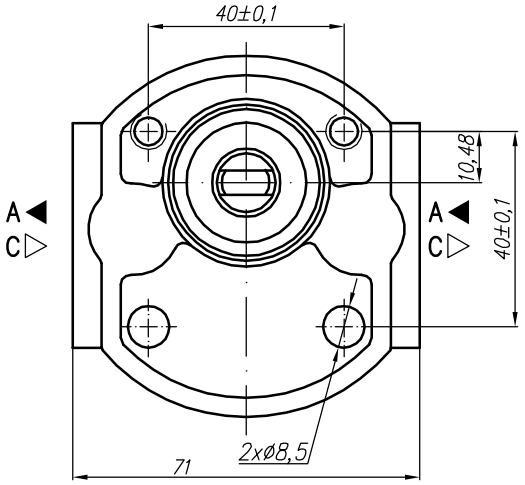

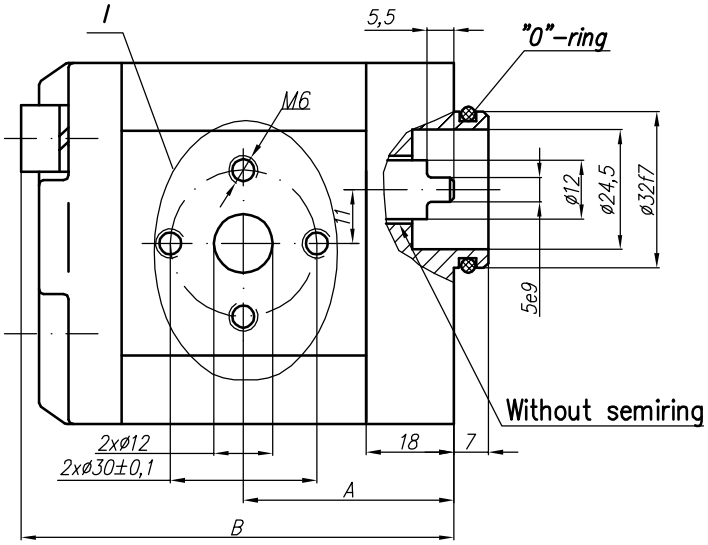

Variants:
...X179 - Normal version (flange);
...X179E - "Italy" ports (see the picture I and the table below)
...X179M - for M ports (see the picture I and the table below);
...X179G - for G ports (see the picture I and the table below);
...X179U - for U ports (see the picture I and the table below).

I – variants

Type	Displacement	Flow		Pressure	max Speed	Dimension							
		at 1500 rpm	at max rpm	P_{nom}	n	A	B	Inlet			Outlet		
	cm^3/rev	l/min	l/min	bar	rpm	mm	mm	M	G	U	M	G	U
10A(C)1X179	1	1,40	3,26	250	3500	39,1	81	M16x1,5	G 3/8" - A	3/4" - 16UNF - 2B	M16x1,5	G 3/8" - A	9/16" - 18UNF - 2B
10A(C)1,25X179	1,25	1,74	4,07	250	3500	39,5	82						
10A(C)1,6X179	1,6	2,23	5,21	250	3500	40,3	83,6						
10A(C)2X179	2	2,82	6,58	250	3500	41,1	85,2						
10A(C)2,5X179	2,5	3,53	8,23	250	3500	42,1	87,2						
* *10A(C)2,65X179*	*2,65*	*3,74*	*8,72*	*250*	*3500*	*42,4*	*87,8*						
10A(C)3,15X179	3,15	4,44	10,36	250	3500	43,5	89,8	M20x1,5	G 1/2"-A				
10A(C)3,65X179	3,65	5,15	12,01	250	3500	44,4	91,9						
10A(C)4,2X179	4,2	5,92	13,82	250	3500	45,5	94,1						
* *10A(C)4,7X179*	*4,7*	*6,63*	*15,46*	*250*	*3500*	*46,1*	*96*						
10A(C)5X179	5	7,05	14,10	250	3000	47,1	97,2						
10A(C)5,7X179	5,7	8,12	16,25	200	3000	48,5	100,1						
10A(C)6,1X179	6,1	8,69	14,49	200	2500	49,4	101,8						
10A(C)7,4X179	7,4	10,55	17,58	180	2500	52,1	107,2	M22x1,5		7/8" - 14UNF	M18x1,5		3/4" - 16UNF
* *10A(C)8X179*	*8*	*11,40*	*15,20*	*150*	*2000*	*53,4*	*109,7*						
10A(C)8,5X179	8,5	12,11	16,15	150	2000	54,4	111,7						
10A(C)9,8X179	9,8	13,97	18,62	120	2000	57	117						

* - These pumps - only under a special order